MODEL 3215

TIGER CRANES

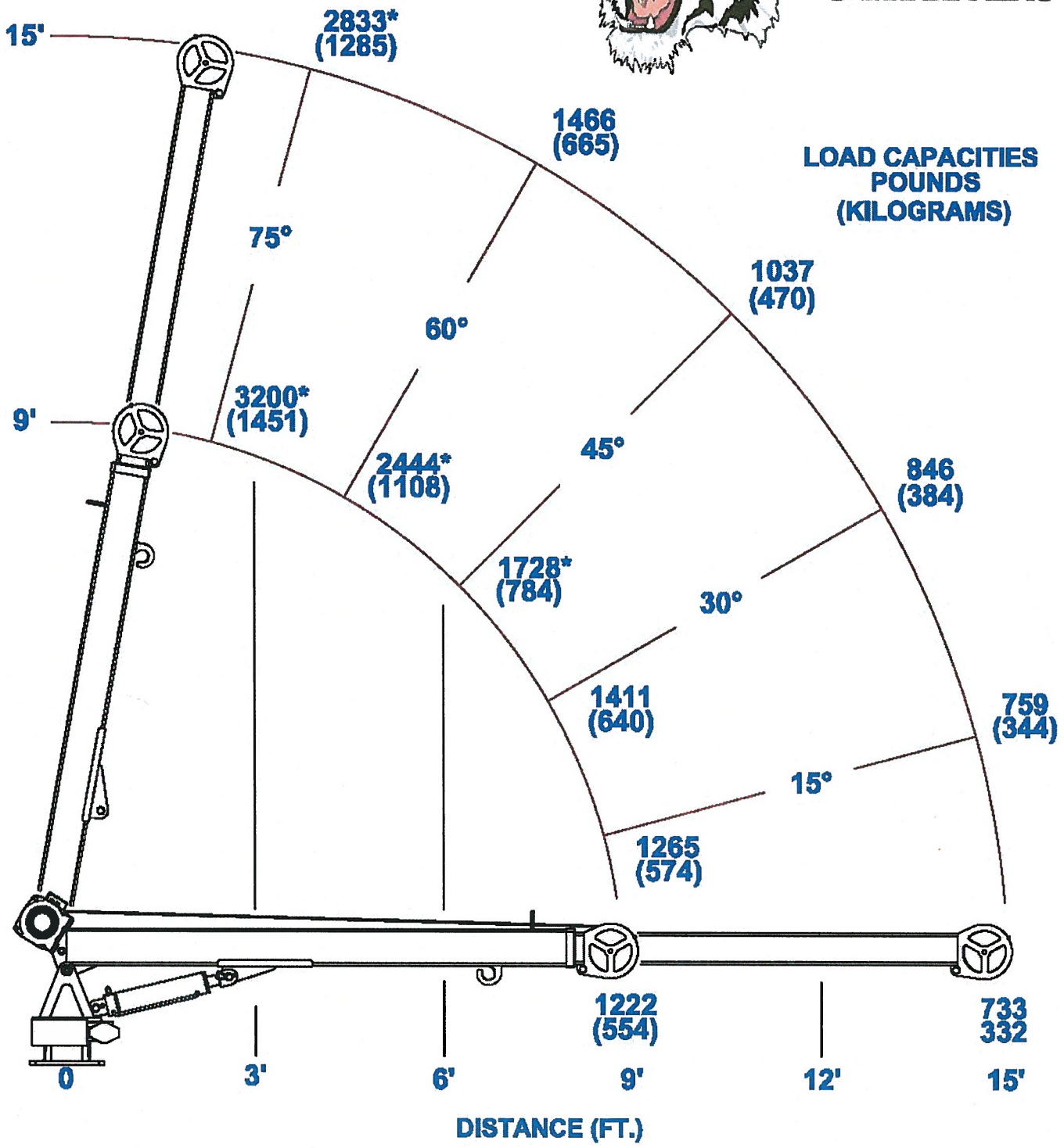

*** MAXIMIUM SINGLE LINE CAPACITY IS 1600 LBS (725kg) IN THESE OPERATING POSITIONS**

DEC343

Load Rating Chart

Model 30112S

©Manitex 2003

NOTE: Additional copies of this Load Rating Chart can be purchased from your Manitex Distributor. When ordering, use the part number shown in the bottom left corner of this page.

RANGE DIAGRAM
- FULLY EXTENDED OUTRIGGER CONFIGURATION -

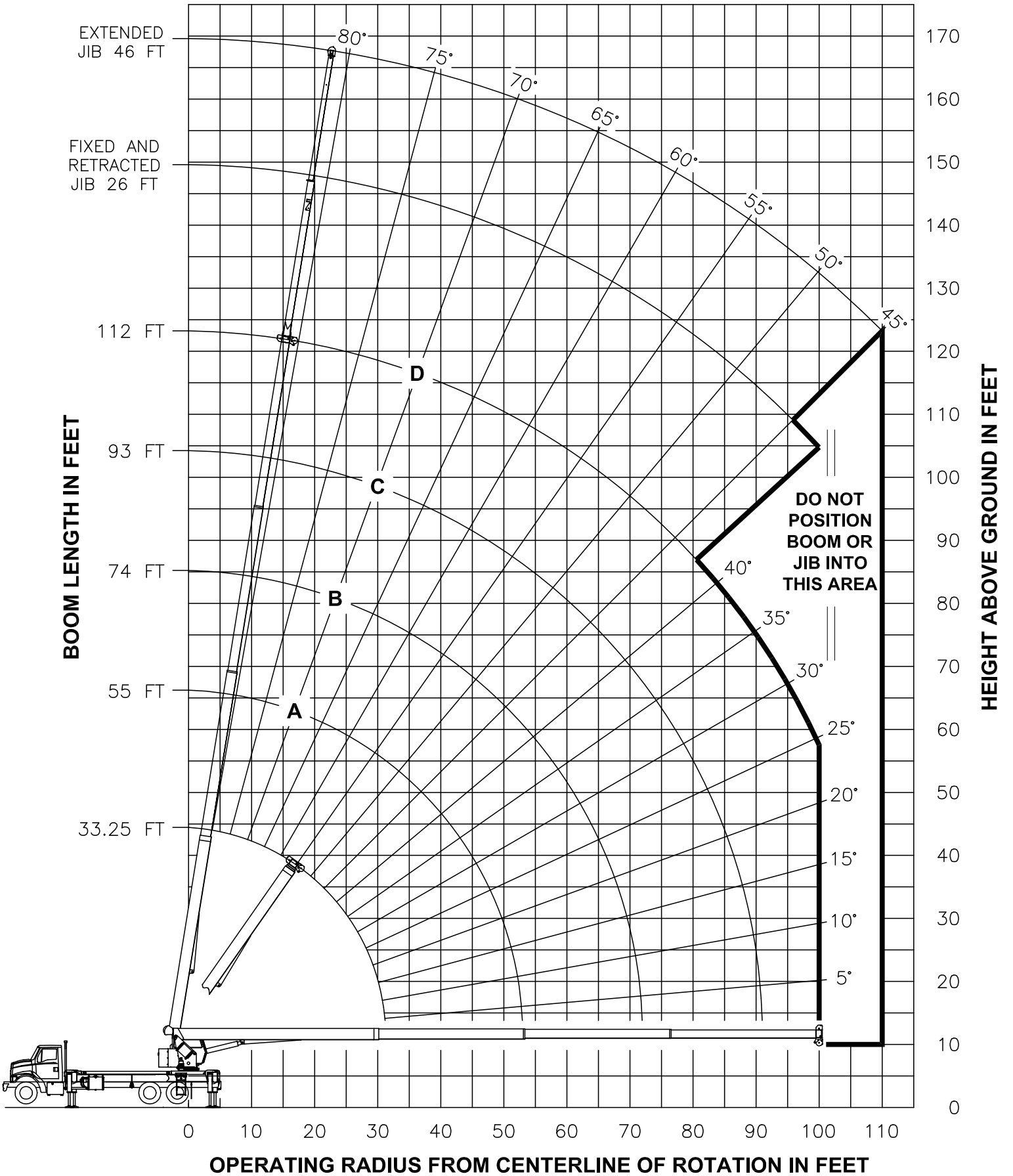

USE THIS CHART ONLY WHEN ALL OUTRIGGERS ARE FULLY EXTENDED

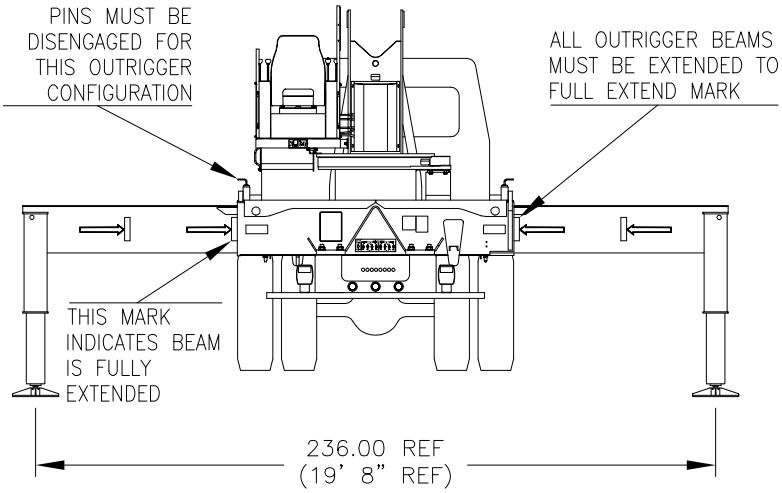

MAIN BOOM AND JIB LIFTING CAPACITIES

MAIN BOOM RATED LOADS											JIB RATED LOADS FOR ALL BOOM LENGTHS						
	33.25 FT (RETR) LMI CODE 1		55 FT (A) LMI CODE 1		74 FT (B) LMI CODE 1		93 FT (C) LMI CODE 1		112 FT (D) LMI CODE 1			26 FT FIXED JIB LMI CODE 2		26 FT TELE JIB LMI CODE 3		46 FT TELE JIB LMI CODE 4	
LOAD RADIUS (FT)	LOADED BOOM ANGLE (DEG)	LIFTING CAPACITY (LBS)	LOADED BOOM ANGLE (DEG)	LIFTING CAPACITY (LBS)	LOADED BOOM ANGLE (DEG)	LIFTING CAPACITY (LBS)	LOADED BOOM ANGLE (DEG)	LIFTING CAPACITY (LBS)	LOADED BOOM ANGLE (DEG)	LIFTING CAPACITY (LBS)	LOAD RADIUS (FT)	LOADED BOOM ANGLE (DEG)	LIFTING CAPACITY (LBS)	LOADED BOOM ANGLE (DEG)	LIFTING CAPACITY (LBS)	LOADED BOOM ANGLE (DEG)	LIFTING CAPACITY (LBS)
5	80	60000									5						
8	75	43830									8						
10	71.5	37330	79.5	25000							10						
12	68	32640	77.5	25000							12						
15	62	27600	74.5	24610	79.5	22120					15						
20	51.5	21850	69	19320	75.5	18080	79.5	13300			20						
25	38.5	16630	63	15930	71.5	14750	76.5	11900	79.5	8000	25						
30	18.5	12710	57	13250	67.5	12440	73.5	10550	77	8000	30	80	4500	80	4300		
35			50	10540	63	10720	70	9330	74.5	7290	35	78	4500	78	4300	79.5	2700
40			42.5	8350	58.5	8570	67	8500	72	6600	40	76.5	4500	76.5	4300	78	2700
45			33.5	6630	53.5	6850	63	6960	69.5	5970	45	74.5	4300	74.5	4030	76.5	2700
50			21.5	5330	48	5560	59.5	5670	66.5	5390	50	72.5	4000	72.5	3720	75	2700
55					42.5	4550	55.5	4660	63.5	4730	55	70.5	3700	70.5	3420	73.5	2700
60					36	3740	51.5	3860	60.5	3920	60	68	3420	68	3140	72	2700
65					27.5	3070	47	3190	57	3260	65	66	3130	66	2800	70	2580
70					16	2510	42.5	2640	54	2710	70	63.5	2790	63.5	2440	68	2390
75							37	2170	50.5	2240	75	61	2350	61	2050	66.5	2220
80							31	1770	46.5	1840	80	58	1940	58	1650	64.5	2020
85							23.5	1410	42.5	1490	85	55.5	1590	55.5	1300	62	1770
90							11	1100	38.5	1180	90	52.5	1290	52.5	990	59.5	1460
95									33.5	910	95	49.5	1020	49.5	720	57	1190
100									28	670	100	46.5	780	46.5	480	54.5	940
105											105					52	730
110											110					49.5	530
	510 LBS		310 LBS		230 LBS		190 LBS		160 LBS		DEDUCTIONS FOR STOWED FIXED JIB						
	770 LBS		470 LBS		350 LBS		280 LBS		230 LBS		DEDUCTIONS FOR STOWED TELESCOPIC JIB						

RANGE DIAGRAM
- MID EXTEND OUTRIGGER CONFIGURATION -

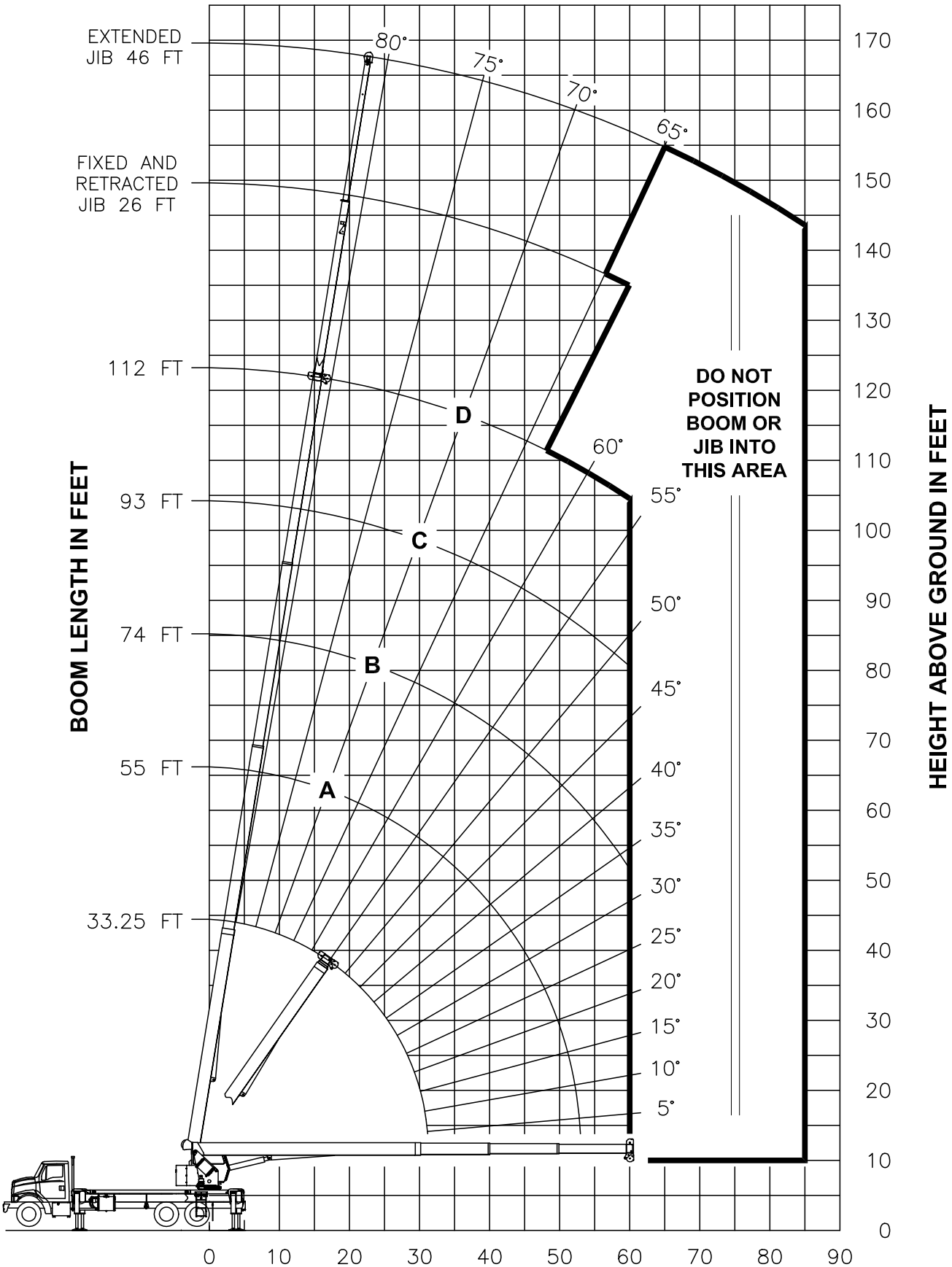

NOTE : LIFTING PERSONNEL WITH CRANE IN THIS OUTRIGGER CONFIGURATION IS STRICTLY PROHIBITED. USE ONLY FULLY EXTENDED OUTRIGGER CONFIGURATION WHEN LIFTING PERSONNEL.

USE THIS CHART ONLY WHEN ALL OUTRIGGERS ARE IN THE MID EXTEND POSITION

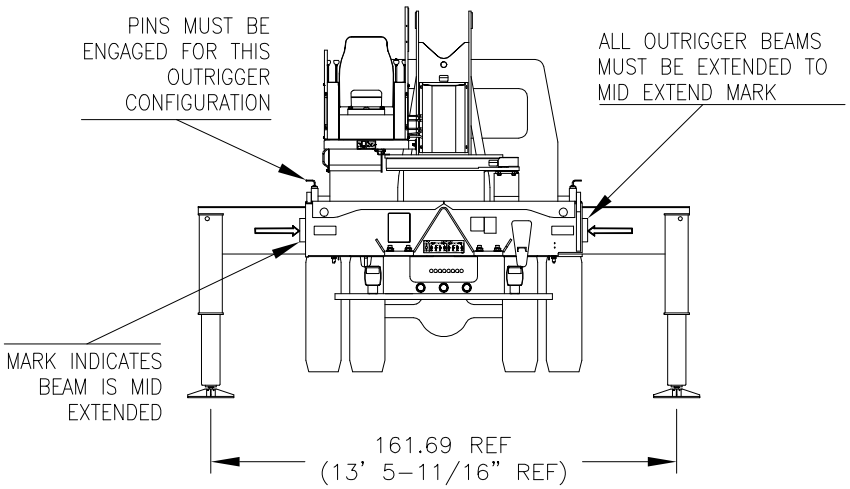

MAIN BOOM AND JIB LIFTING CAPACITIES

MAIN BOOM RATED LOADS											JIB RATED LOADS FOR ALL BOOM LENGTHS						
	33.25 FT (RETR) LMI CODE 9		55 FT (A) LMI CODE 9		74 FT (B) LMI CODE 9		93 FT (C) LMI CODE 9		112 FT (D) LMI CODE 9			26 FT FIXED JIB LMI CODE 10		26 FT TELE JIB LMI CODE 11		46 FT TELE JIB LMI CODE 12	
LOAD RADIUS (FT)	LOADED BOOM ANGLE (DEG)	LIFTING CAPACITY (LBS)	LOADED BOOM ANGLE (DEG)	LIFTING CAPACITY (LBS)	LOADED BOOM ANGLE (DEG)	LIFTING CAPACITY (LBS)	LOADED BOOM ANGLE (DEG)	LIFTING CAPACITY (LBS)	LOADED BOOM ANGLE (DEG)	LIFTING CAPACITY (LBS)	LOAD RADIUS (FT)	LOADED BOOM ANGLE (DEG)	LIFTING CAPACITY (LBS)	LOADED BOOM ANGLE (DEG)	LIFTING CAPACITY (LBS)	LOADED BOOM ANGLE (DEG)	LIFTING CAPACITY (LBS)
5	80	60000									5						
8	75	43830									8						
10	71.5	37330	79.5	25000							10						
12	68	32640	77.5	25000							12						
15	62	24850	74.5	24610	79.5	22120					15						
20	51.5	13890	69	14520	75.5	14760	79.5	13300			20						
25	38.5	8910	63	9510	71.5	9720	76.5	9850	79.5	8000	25						
30	18.5	6030	57	6650	67.5	6850	73.5	6960	77	7040	30	80	4500	80	4300		
35			50	4790	63	4990	70	5100	74.5	5170	35	78	4500	78	4300	79.5	2700
40			42.5	3490	58.5	3690	67	3800	72	3860	40	76.5	3950	76.5	3640	78	2700
45			33.5	2530	53.5	2730	63	2830	69.5	2900	45	74.5	2980	74.5	2670	76.5	2700
50			21.5	1770	48	1990	59.5	2090	66.5	2160	50	72.5	2230	72.5	1920	75	2440
55					42.5	1400	55.5	1500	63.5	1570	55	70.5	1640	70.5	1330	73.5	1830
60					36	920	51.5	1020	60.5	1090	60	68	1160	68	850	72	1350
65																70	940
	510 LBS		310 LBS		230 LBS		190 LBS		160 LBS		DEDUCTIONS FOR STOWED FIXED JIB						
	770 LBS		470 LBS		350 LBS		280 LBS		230 LBS		DEDUCTIONS FOR STOWED TELESCOPIC JIB						

RANGE DIAGRAM
- FULLY RETRACTED OUTRIGGER CONFIGURATION -

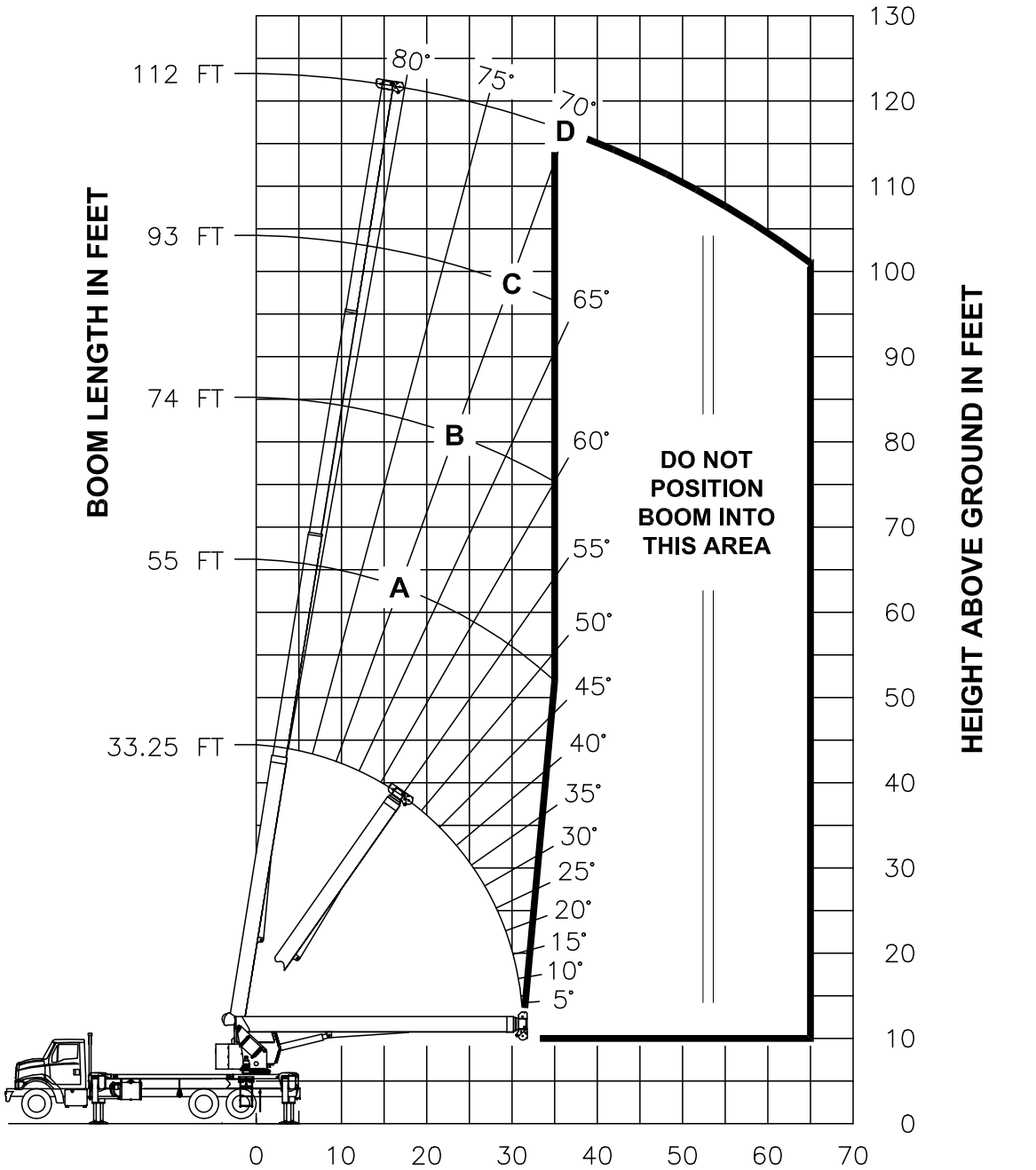

NOTE : LIFTING PERSONNEL WITH CRANE IN THIS OUTRIGGER CONFIGURATION IS STRICTLY PROHIBITED. USE ONLY FULLY EXTENDED OUTRIGGER CONFIGURATION WHEN LIFTING PERSONNEL.

USE THIS CHART ONLY WHEN ALL OUTRIGGERS ARE FULLY RETRACTED

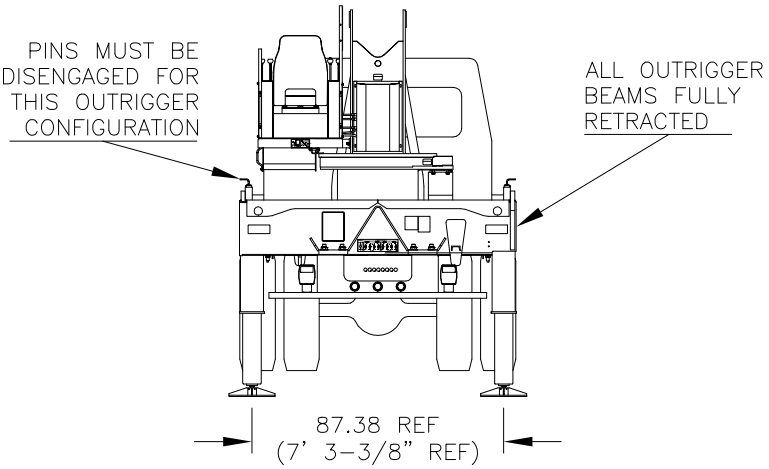

MAIN BOOM AND JIB LIFTING CAPACITIES

MAIN BOOM RATED LOADS											
	33.25 FT (RETR) LMI CODE 13		55 FT (A) LMI CODE 13		74 FT (B) LMI CODE 13		93 FT (C) LMI CODE 13		112 FT (D) LMI CODE 13		
LOAD RADIUS (FT)	LOADED BOOM ANGLE (DEG)	LIFTING CAPACITY (LBS)	LOADED BOOM ANGLE (DEG)	LIFTING CAPACITY (LBS)	LOADED BOOM ANGLE (DEG)	LIFTING CAPACITY (LBS)	LOADED BOOM ANGLE (DEG)	LIFTING CAPACITY (LBS)	LOADED BOOM ANGLE (DEG)	LIFTING CAPACITY (LBS)	
5	80	60000									**NO JIBS ARE TO BE ERECTED IN THIS OUTRIGGER CONFIGURATION**
8	75	27790									
10	71.5	17750	79.5	18400							
12	68	12510	77.5	13100							
15	62	8100	74.5	8640	79.5	8850					
20	51.5	4330	69	4850	75.5	5030	79.5	5140			
25	38.5	2310	63	2820	71.5	3000	76.5	3100	79.5	3170	
30	18.5	1020	57	1560	67.5	1740	73.5	1840	77	1900	
35			50	700	63	880	70	980	74.5	1040	
	510 LBS		310 LBS		230 LBS		190 LBS		160 LBS		DEDUCTIONS FOR STOWED FIXED JIB
	770 LBS		470 LBS		350 LBS		280 LBS		230 LBS		DEDUCTIONS FOR STOWED TELESCOPIC JIB

ALLOWABLE LINE PULL							WARNING
1 PART LINE	2 PART LINE	3 PART LINE	4 PART LINE	5 PART LINE	6 PART LINE	7 PART LINE	
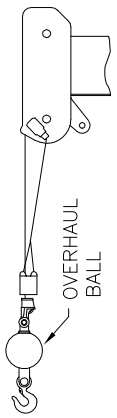	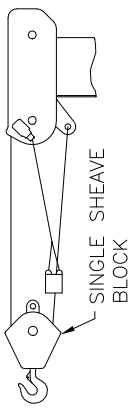	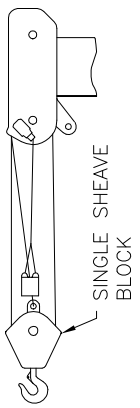	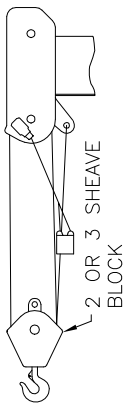		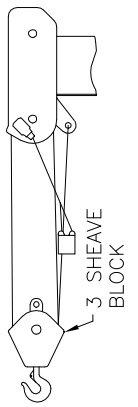	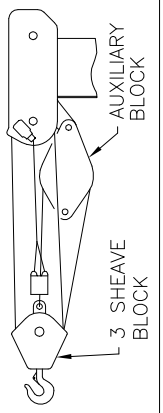	ANTI–TWO–BLOCK SYSTEM MUST BE IN GOOD OPERATING CONDITION BEFORE OPERATING CRANE. REFER TO THE OWNER'S MANUAL. KEEP AT LEAST 3 WRAPS OF LOAD LINE ON THE DRUM AT ALL TIMES.
8500 LBS	17000 LBS	25500 LBS	34000 LBS	42500 LBS	51000 LBS	60000 LBS	9/16" 6X25 IWRC (3.5:1 SF) – 30000 LBS MIN BREAKING STRENGTH
7700 LBS	15400 LBS	23100 LBS	30800 LBS	38500 LBS	46200 LBS	53900 LBS	9/16" ROT RESISTANT (5.0:1 SF) – 38500 LBS MIN BREAKING STRENGTH

AREA OF OPERATION

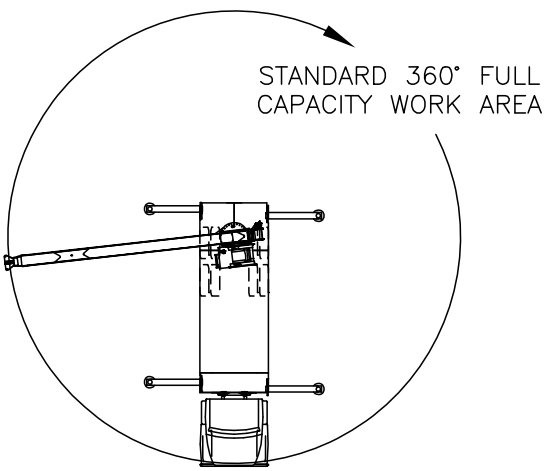

DEDUCTIONS FROM RATED LOADS FOR LOAD HANDLING DEVICES SUPPLIED BY MANITEX INC.

AUXILIARY BLOCK — — — — — — — — — — — — 50 LBS
OVERHAUL BALL — — — — SEE OVERHAUL BALL MANUFACTURER NAMEPLATE
LOAD BLOCK — — — — — — — SEE BLOCK MANUFACTURER NAMEPLATE
HOSE REEL — — — — — — — — — — — — — 140 LBS
SWING AROUND JIB — — — — — — — — — — SEE LOAD CHART

LMI OPERATING CODES

SETTING	CRANE CONFIGURATION	OUTRIGGER CONFIGURATION
#1	MAIN BOOM	FULLY EXTENDED
#2	FIXED JIB	FULLY EXTENDED
#3	TELESCOPIC JIB-RETRACTED	FULLY EXTENDED
#4	TELESCOPIC JIB-EXTENDED	FULLY EXTENDED
#5	PERSONNEL LIFTING PLATFORM ON MAIN BOOM	FULLY EXTENDED
#6	PERSONNEL LIFTING PLATFORM ON FIXED JIB	FULLY EXTENDED
#7	PERSONNEL LIFTING PLATFORM ON TELESCOPIC JIB-RETRACTED	FULLY EXTENDED
#8	PERSONNEL LIFTING PLATFORM ON TELESCOPIC JIB-EXTENDED	FULLY EXTENDED
#9	MAIN BOOM	INTERMEDIATE
#10	FIXED JIB	INTERMEDIATE
#11	TELESCOPIC JIB-RETRACTED	INTERMEDIATE
#12	TELESCOPIC JIB-EXTENDED	INTERMEDIATE
#13	MAIN BOOM	FULLY RETRACTED

WARNING

1. THE OPERATOR MUST READ AND UNDERSTAND THE OWNER'S MANUAL BEFORE OPERATING THIS CRANE.

2. POSITIONING OR OPERATION OF CRANE BEYOND AREAS SHOWN ON THIS CHART IS NOT INTENDED OR APPROVED EXCEPT WHERE SPECIFIED IN OWNER'S MANUAL.

3. LOADED BOOM ANGLES AT SPECIFIED BOOM LENGTHS GIVE ONLY AN APPROXIMATION OF THE OPERATING RADIUS. THE BOOM ANGLE BEFORE LOADING SHOULD BE GREATER TO ACCOUNT FOR DEFLECTIONS. DO NOT EXCEED THE OPERATING RADIUS FOR RATED LOADS.

4. THE OPERATING RADIUS SHOWN IN THE JIB RATING CHART IS FOR FULLY EXTENDED BOOM ONLY. WHEN BOOM IS NOT FULLY EXTENDED, USE ONLY LOADED BOOM ANGLE TO DETERMINE LOAD RATING OF JIB.

5. FOR BOOM ANGLES NOT SHOWN ON JIB LOAD RATING CHART, USE RATING OF NEXT LOWER BOOM ANGLE.

6. FOR BOOM LENGTHS NOT SHOWN, USE RATING OF NEXT SHORTER OR LONGER BOOM LENGTH, WHICHEVER IS LESS. FOR RADII NOT SHOWN, USE RATING OF NEXT LONGER RADIUS.

7. CRANE LOAD RATINGS ON OUTRIGGERS ARE BASED ON FREELY SUSPENDED LOADS WITH THE MACHINE LEVELED AND STANDING ON A FIRM UNIFORM SUPPORTING SURFACE. NO ATTEMPT SHALL BE MADE TO MOVE A LOAD HORIZONTALLY ON THE GROUND IN ANY DIRECTION.

WARNING (CONTINUED)

8. PRACTICAL WORKING LOADS DEPEND ON SUPPORTING SURFACE, WIND, AND OTHER FACTORS AFFECTING STABILITY SUCH AS HAZARDOUS SURROUNDINGS, EXPERIENCE OF PERSONNEL, AND PROPER HANDLING, ALL OF WHICH MUST BE TAKEN INTO ACCOUNT BY THE OPERATOR.

9. THE MAXIMUM LOAD WHICH MAY BE TELESCOPED IS LIMITED BY HYDRAULIC PRESSURE, BOOM ANGLE, AND BOOM LUBRICATION. IT IS SAFE TO ATTEMPT TO TELESCOPE ANY LOAD WITHIN THE LIMITS OF THE LOAD RATING CHART.

10. LIFTING OFF THE MAIN BOOM POINT WHILE THE SWING AROUND JIB IS ERECTED IS NOT INTENDED OR APPROVED.

INFORMATION

1. DEDUCTIONS MUST BE MADE FROM RATED LOADS FOR STOWED JIB, OPTIONAL ATTACHMENTS, HOOKS, AND LOADBLOCKS (SEE DEDUCTION CHART). WEIGHTS OF SLINGS AND ALL OTHER LOAD HANDLING DEVICES SHALL BE CONSIDERED A PART OF THE LOAD.

2. LOAD RATINGS ABOVE THE HEAVY LINE ARE STRUCTURALLY LIMITED CAPACITIES. LOAD RATINGS BELOW THE HEAVY LINE ARE STABILITY LIMITED CAPACITIES AND DO NOT EXCEED 85% OF TIPPING.

DEFINITIONS

1. OPERATING RADIUS IS THE HORIZONTAL DISTANCE FROM THE AXIS OF ROTATION TO THE CENTER OF THE VERTICAL HOIST LINE OR TACKLE WITH LOAD APPLIED.

2. LOADED BOOM ANGLE AS SHOWN IN THE COLUMN HEADED BY ∠, IS THE INCLUDED ANGLE BETWEEN THE HORIZONTAL AND LONGITUDINAL AXES OF THE BOOM BASE AFTER LIFTING RATED LOAD AT RATED RADIUS.

Link-Belt
CONSTRUCTION EQUIPMENT

Lifting Capacities

Telescopic Boom Rough Terrain Crane

RTC–8050

50–ton *(45.36 metric tons)*

Series II

Boom and Fly Capacities for this machine are listed by the following sections.

Fully Extended Outriggers

- Working Range Diagram
- 35.5' to 60.3' *(10.82 – 18.38 m)* Main Boom Capacities, "A–max" Mode
- 35.5' to 110' *(10.82 – 33.53 m)* Main Boom Capacities, Basic Mode "B"
- 28.5' *(8.69 m)* One–piece Fly Capacities, Basic Mode "B"
- 28.5' to 51' *(8.69 – 15.54 m)* Two–piece Fly Capacities, Basic Mode "B"

On Tires

- Working Range Diagram
- 35.5' to 60.3' *(10.82 – 18.38 m)* Main Boom Capacities, "A–max" Mode
- 35.5' to 70' *(10.82 – 21.34 m)* Main Boom Capacities, Basic Mode "B"

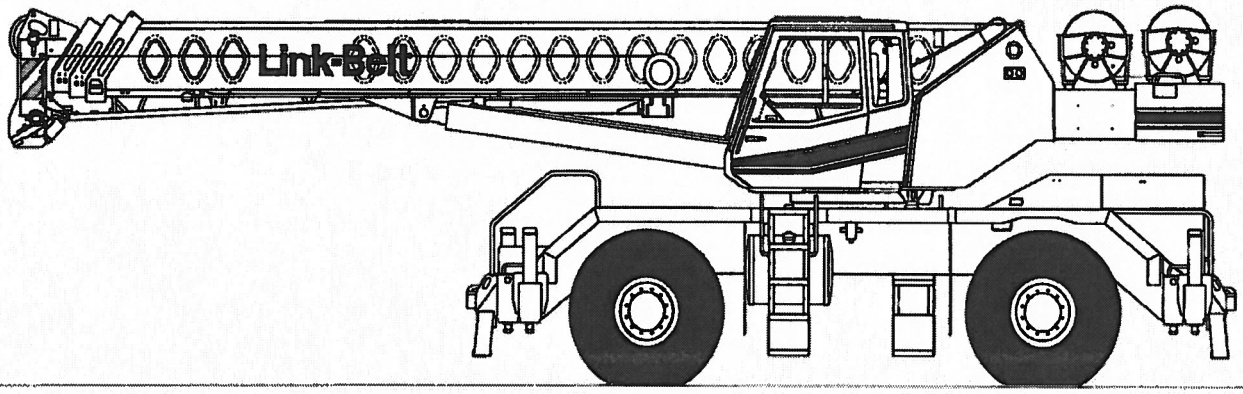

CAUTION: This material is supplied for reference use only. Operator must refer to in–cab Crane Rating Manual to determine allowable machine lifting capacities and operating procedures.

Litho in U.S.A. 3/01

#6304 (Supersedes #6278)

⚠ WARNING

READ AND UNDERSTAND THE OPERATOR'S AND SAFETY MANUALS AND THE FOLLOWING INSTRUCTIONS AND RATED LIFTING CAPACITIES BEFORE OPERATING CRANE. OPERATION WHICH DOES NOT FOLLOW THESE INSTRUCTIONS MAY RESULT IN AN ACCIDENT

OPERATING INSTRUCTIONS

GENERAL:

1. Rated lifting capacities in pounds as shown on lift charts pertain to this crane as originally manufactured and normally equipped. Modifications to the crane or use of optional equipment other than that specified can result in a reduction of capacity.
2. Construction equipment can be dangerous if improperly operated or maintained. Operation and maintenance of this crane must be in compliance with the information in the Operator's, Parts, and Safety Manuals supplied with this crane. If these manuals are missing, order replacements through the distributor.
3. The operator and other personnel associated with this crane shall read and fully understand the latest applicable American National Standards ASME B30.5 safety standards for cranes.
4. The rated lifting capacities are based on crane standing level on firm supporting surface.

SET UP:

1. The crane shall be leveled on a firm supporting surface. Depending on the nature of the supporting surface, it may be necessary to have structural supports under the outrigger pontoons or tires to spread the load to a larger bearing surface.
2. When making lifts on outriggers, all tires must be free of supporting surface. All outrigger beams must be extended to the same length; fully retracted, intermediate extended, or fully extended.
3. When operating on tires over the side, do not exceed 71° maximum boom angle. Loss of backward stability will occur causing a backward tipping condition.
4. When making lifts on tires, they must be inflated to the recommended pressure. (See Operation note 20 and Tire Inflation.)
5. For required parts of line, see Wire Rope Capacity and Winch Performance.
6. Before setting up on intermediate outriggers, retracted outriggers, or tires, refer to Working Range Diagrams and rated lifting capacities to determine allowable crane configurations.

OPERATION:

1. Rated lifting capacities at rated radii shall not be exceeded. Do not tip the crane to determine allowable loads. For concrete bucket operation, weight of bucket and load shall not exceed 80% of rated lifting capacities. For clamshell bucket operation, weight of bucket and bucket contents is restricted to a maximum weight of 6000 pounds or 80% of rated lifting capacity, whichever is less. For magnet operation, weight of magnet and load is restricted to a maximum weight of 6000 pounds or 80% of rated lifting capacity, whichever is less. For clamshell and magnet operation, maximum boom length is restricted to 50 feet and the boom angle is restricted to a minimum of 35 degrees. Lifts with any fly erected are prohibited for both clam and magnet operation.
2. Rated lifting capacities shown on fully extended outriggers do not exceed 85% of the tipping loads. Rated lifting capacities shown on intermediate extended or fully retracted outriggers are determined by the formula, rated load = (tipping load – 0.1 X load factor) / 1.25. Rated lifting capacities shown on tires do not exceed 75% of the tipping loads. Tipping loads are determined by SAE crane stability test code J–765.
3. Rated lifting capacities in the shaded areas are based on structural strength or hydraulic limitations and have been tested to meet minimum requirements of SAE J–1063 cantilevered boom crane structures–method of test. Rated lifting capacities in the non–shaded areas are based on stability ratings. Some capacities are limited by a maximum obtainable 78° boom angle.
4. Rated lifting capacities include the weight of hook ball/block, slings, bucket, magnet and auxiliary lifting devices. Their weights must be subtracted from the listed rated capacity to obtain the net load that can be lifted. Rated lifting capacities include the deduct for either fly stowed on the base of the boom. For deducts of either fly erected, but not used, see Capacity Deductions For Auxiliary Load Handling Equipment.
5. Rated lifting capacities are based on freely suspended loads. No attempt shall be made to move a load horizontally on the ground in any direction.
6. Rated lifting capacities are for lift crane service only.
7. Do not operate at radii or boom lengths (minimum or maximum) where capacities are not listed. At these positions, the crane can tip or cause boom failure.

8. The maximum loads that can be telescoped are not definable because of variation in loadings and crane maintenance, but it is permissible to attempt retraction and extension within the limits of the applicable load rating chart.
9. For main boom capacities when either boom length or radius or both are between values listed, proceed as follows:
   a. For boom lengths not listed, use rating for next longer boom length or next shorter boom length, whichever is smaller.
   b. For load radii not listed, use rating for next larger radius.
10. The user shall operate at reduced ratings to allow for adverse job conditions, such as: soft or uneven ground, out of level conditions, wind, side loads, pendulum action, jerking or sudden stopping of loads, hazardous conditions, experience of personnel, traveling with loads, electrical wires, etc. Side load on boom or fly is dangerous and shall be avoided.
11. Shock loading the boom shall be avoided. However, in cold weather, if it is believed that shock loads may occur, rated capacities should be reduced by the following rule: a 1% reduction in rated capacities should be taken for each 1°F below 0°F.
12. When making lifts with auxiliary head machinery, the effective length of the boom increases by 2 feet.
13. Power sections of boom must be extended in accordance with boom mode "A" or "B". In boom mode "B" all power sections must be extended or retracted equally.
14. The least stable rated working area depends on the configuration of the crane set up.
15. Rated lifting capacities are based on correct reeving. Deduction must be made for excessive reeving. Any reeving over minimum required (see Wire Rope Capacity) is considered excessive and must be accounted for when making lifts. Use Working Range Diagram to estimate the extra feet of rope then deduct 1 lb. for each extra foot of wire rope before attempting to lift a load.
16. The loaded boom angle combined with the boom length give only an approximation of the operating radius. The boom angle, before loading, should be greater to account for deflection. For main boom capacities, the loaded boom angle is for reference only. For fly capacities, the load radius is for reference only.
17. For fly capacities with main boom length less than 110 ft. and greater than 90 ft., the rated loads are determined by the boom angle using the 110 ft. boom and fly chart. For angles not shown use the next lower boom angle to determine the rated capacity.
18. For fly capacities with main boom length less than 90 ft. the rated loads are determined by the boom angle only using the 90 ft. boom and fly chart. For angles not shown, use the next lower boom angle to determine the rated capacity.
19. The 35.5 ft. boom length structural capacities are based on boom fully retracted. If the boom is not fully retracted, do not exceed capacities shown for the 40 ft. boom length.
20. Rated lifting capacities on tires depend on tire capacity, condition of tires, and tire air pressure. On tire capacities require lifting from main boom head only on a smooth and level surface. Pick and carry operations are restricted to speed of 2.5 mph and creep . The boom must be centered over the front of the crane with two–position travel swing lock engaged and the load must be restrained from swinging. Lifts with any fly erected on tires are prohibited. For correct tire pressure, see Tire Inflation.

DEFINITIONS:

1. Load Radius: Horizontal distance from a projection of the axis of rotation to the supporting surface, before loading, to the center of the vertical hoist line or tackle with load applied.
2. Loaded Boom Angle: $\measuredangle^{\circ}$ The angle between the boom base section and horizontal with freely suspended load at the rated radius.
3. Working Area: Area measured in a circular arc about the center line of rotation as shown on the Working Area Diagram.
4. Freely Suspended Load: Load hanging free with no direct external force applied except by the hoist line.
5. Side Load: Horizontal side force applied to the lifted load either on the ground or in the air.
6. No Load Stability Limit: The radius or boom angle beyond which it is not permitted to position the boom because the crane can overturn without any load on the hook.
7. Load Factor: Load applied at the boom tip which gives the same moment effect as the boom mass.
8. Creep: Crane movement limited to 200 ft. in a 30 minute period and not to exceed 1 mph maximum speed.

TIRE INFLATION

Tire Size	Operation	Tire Pressure (psi)
20.5 X 25 24 Ply Rating	Stationary	85
	Creep	85
	2.5 m.p.h.	85
20.5R25 2 Star Rating	Stationary	102
	Creep	102
	2.5 m.p.h.	102

PONTOON LOADINGS

Maximum Pontoon Load	Maximum Pontoon Ground Bearing Pressure:
63,500 lb	213 psi

BOOM MODES

Boom Mode "A"

Only inner mid section telescopes.

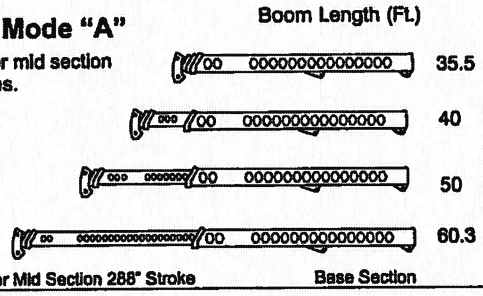

Boom Mode "B"

Inner–mid, outer–mid and tip sections telescope simultaneously.

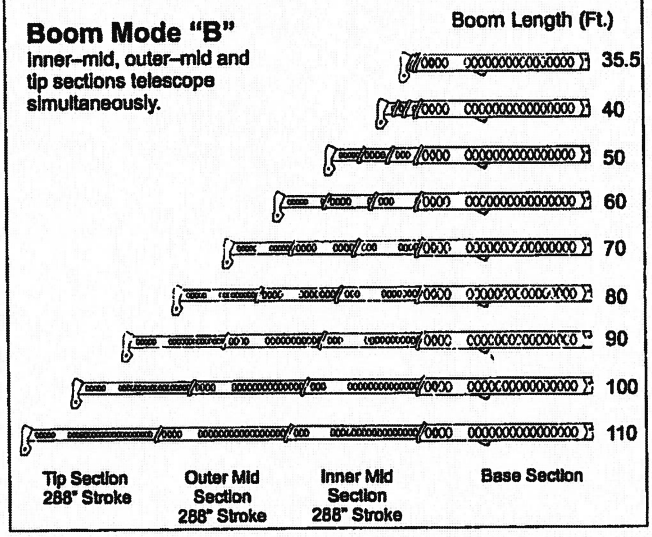

WIND SPEED RESTRICTIONS

If The Wind Speed Exceeds:	Rated Lifted Capacities Must Be Reduced By At Least:
20 MPH	40%
30 MPH	70%
40 MPH	Crane operation must be shutdown and the boom retracted and lowered to horizontal.

- Additional reductions are required for loads with large wind sail area.
- These restrictions are based on machine on fully extended outriggers.
- The operator shall add 10° to all minimum boom angles due to no load stability and shall not boom down below that angle.

WINCH PERFORMANCE

Winch Line Pulls			Drum Rope Capacity (Ft.)	
	Two Speed Winch			
Wire Rope Layer	Low Speed Available Lbs.*	High Speed Available Lbs.	Layer	Total
1	15,390	7,302	114	114
2	14,150	6,714	124	238
3	13,094	6,213	134	372
4	12,185	5,781	144	516
5	11,394	5,406	154	670

* Maximum lifting capacity:
Type RB Rope = 12,920 Type ZB Rope = 15,600

WIRE ROPE CAPACITY

Maximum Lifting Capacities Based On Wire Rope Strength			
Parts of Line	3/4" Type RB	3/4" Type ZB	Notes
1	12,920	15,600	Capacities shown are in pounds and working loads must not exceed the ratings on the capacity charts in the Crane Rating Manual. Study Operator's Manual for wire rope inspection procedures and single part of line application.
2	25,840	31,200	
3	38,760	46,800	
4	51,680	62,400	
5	64,600	78,000	
6	77,520	93,600	
7	90,440	109,200	
8	103,360	124,800	

LBCE	DESCRIPTION
Type RB	18 x 19 Rotation Resistant – Compacted Strand – High Strength, Preformed, Right Regular Lay
Type ZB	36 x 7 Rotation Resistant – Extra Improved Plow Steel – Right Regular Lay

HYDRAULIC CIRCUIT PRESSURE SETTINGS

Function	Pressure (psi)
Front And Rear Winch	3,500
Outrigger	3,000
Boom Hoist	3,500
Telescope	3,000
Swing	1,500
Steering	2,500
Pilot Control	500

WORKING AREAS

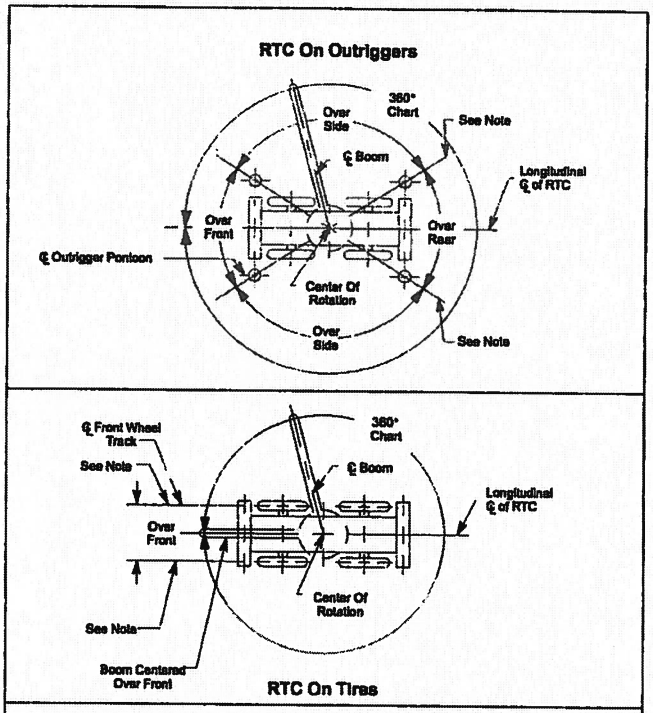

Note: These Lines Determine The Limiting Position Of Any Load For Operation Within Working Areas Indicated.

CAPACITY DEDUCTIONS FOR AUXILIARY LOAD HANDLING EQUIPMENT

Load Handling Equipment	Weight (lbs)
Auxiliary Head Attached	100
40 Ton Quick Reeve 3 Sheave Hook Block (See Hook Block For Actual Weight)	720
60 Ton Quick Reeve 3 Sheave Hook Block (See Hook Block For Actual Weight)	1109
10 Ton Quick Reeve 3 Sheave Hook Block (See Hook Block For Actual Weight)	583
8.5 Ton Hook Ball (See Hook Ball For Actual Weight)	360

Lifting From Main Boom With:	
28.5 or 51 Ft. Fly Stowed on Boom Base (See operation note #4)	0
28.5 Ft. Offset Fly Erected But Not Used	3,200
51 Ft. Offset Fly Erected But Not Used	6,800

Lifting From 28.5 Ft. Offset Fly With:	
22.5 Ft. Fly Tip Erected But Not Used	PROHIBITED
22.5 Ft. Fly Tip Stowed On 28.5 Ft. Offset Fly	PROHIBITED

Note: Capacity deductions are for Link–Belt supplied equipment only.

WORKING RANGE DIAGRAM

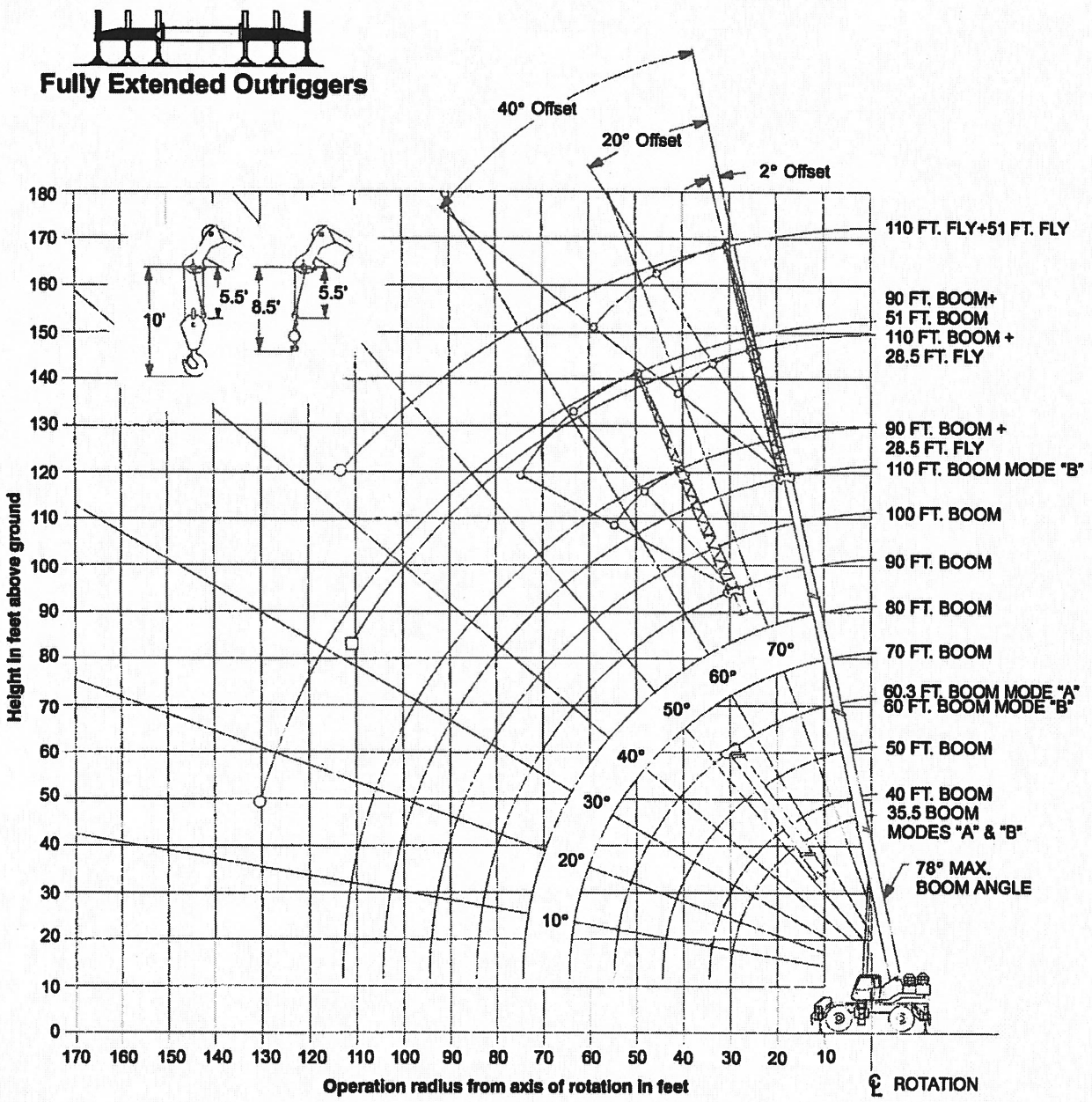

○ Denotes Main Boom + 51 Ft. Offset Fly–Boom Mode "B"

□ Denotes Main Boom + 28.5 Ft. Offset Fly–Boom Mode "B"

Note: Boom and fly geometry shown are for unloaded condition and crane standing level on firm supporting surface. Boom deflection, subsequent radius and boom angle change must be accounted for when applying load to hook.

⚠ WARNING

Do Not Lower The Boom Below The Minimum Boom Angle For No Load Stability As Shown In The Lift Charts For The Boom Lengths Given. Loss Of Stability Will Occur Causing A Tipping Condition.

Note: Refer To Page 5 For "Capacity Deductions For Auxiliary Load Handling. Equipment". ∡° Loaded Boom Angle In Degrees. ( ) Reference Radius For Minimum Boom Angle Capacities (Shown In Parenthesis) Are In Feet.

Rated Lifting Capacities In Pounds
Fully Extended Outriggers
See Set Up Note 2

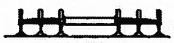
FULL

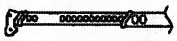
MAIN BOOM "A"

Load Radius (Ft.)	35.5 Ft.			40 Ft.		
	∡°	360°	Over Front	∡°	360°	Over Front
10	68.0	100,000	100,000	70.5	78,400	78,400
12	64.5	73,900	75,400	67.5	73,100	73,100
15	58.5	63,200	64,400	62.5	63,000	63,600
20	48.0	50,300	51,300	54.0	50,100	51,200
25	34.5	39,000	40,900	44.0	38,900	40,700
30				31.0	30,800	32,300
Min.Bm. Ang.Cap.	0 (30.0)	17,800	17,800	0 (34.5)	15,300	15,300

Load Radius (Ft.)	50 Ft.			60.3 Ft.		
	∡°	360°	Over Front	∡°	360°	Over Front
10	75.0	72,600	72,600			
12	72.5	65,600	65,600	76.5	50,900	50,900
15	69.0	57,600	57,600	73.5	46,900	46,900
20	62.5	47,600	47,600	68.5	39,200	39,200
25	55.5	38,600	40,200	63.0	33,400	33,400
30	48.0	30,500	32,100	57.5	28,700	28,700
35	39.0	24,600	26,100	51.0	24,600	25,200
40	27.5	19,100	20,400	44.0	18,800	20,200
45				36.0	14,900	16,000
50				26.0	11,800	12,600
Min.Bm. Ang.Cap.	0 (44.5)	10,100	10,100	0 (54.8)	6,500	6,500

Rated Lifting Capacities In Pounds
Fully Extended Outriggers
See Set Up Note 2

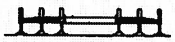
FULL

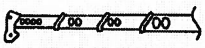
MAIN BOOM "B"

Load Radius (Ft.)	35.5 Ft.			40 Ft.			50 Ft.		
	∡°	360°	Over Front	∡°	360°	Over Front	∡°	360°	Over Front
10	68.0	100,000	100,000	70.5	37,900	37,900	74.5	37,900	37,900
12	64.5	78,900	75,400	67.5	37,900	37,900	72.5	37,900	37,900
15	58.5	63,200	64,400	62.5	37,900	37,900	69.0	37,900	37,900
20	48.0	50,300	51,300	54.0	37,900	37,900	62.5	37,900	37,900
25	34.5	39,000	40,900	44.0	37,900	37,900	55.5	37,900	37,900
30				31.0	31,300	32,900	48.0	31,900	33,500
35							39.0	26,100	27,500
40							27.5	20,800	22,100
Min.Bm Ang Cap	0 (30.0)	17,800	17,800	0 (34.5)	14,700	14,700	0 (44.5)	9,900	9,900

Load Radius (Ft.)	60 Ft.			70 Ft.			80 Ft.		
	∡°	360°	Over Front	∡°	360°	Over Front	∡°	360°	Over Front
10	77.5	37,900	37,900						
12	76.0	37,900	37,900	78.0*	37,900	37,900			
15	73.0	37,900	37,900	76.0	37,900	37,900	78.0*	36,400	36,400
20	68.0	37,900	37,900	72.0	37,900	37,900	74.5	34,700	34,700
25	62.5	37,900	37,900	67.5	37,900	37,900	71.0	34,200	34,200
30	56.5	32,300	33,900	62.5	32,500	32,800	67.0	30,300	30,300
35	50.5	26,500	27,800	57.5	26,700	28,100	63.0	26,900	27,200
40	43.5	21,200	22,500	52.5	21,400	22,700	58.5	21,500	22,800
45	35.5	17,100	18,200	46.5	17,300	18,400	54.0	17,400	18,500
50	25.0	13,900	14,900	40.5	14,200	15,200	49.0	14,300	15,300
55				33.0	11,900	12,700	44.0	12,100	12,800
60				23.5	10,000	10,700	38.0	10,200	10,900
65							31.0	8,600	9,300
70							22.0	7,300	7,900
MinBm Ang Cap	0 (54.5)	7,000	7,000	0 (64.5)	5,000	5,000	0 (74.5)	3,500	3,500

Load Radius (Ft.)	90 Ft.			100 Ft.			110 Ft.		
	∡°	360°	Over Front	∡°	360°	Over Front	∡°	360°	Over Front
20	77.0	26,900	26,900						
25	74.0	26,200	26,200	76.0	24,000	24,000	77.5	19,500	19,500
30	70.5	24,600	24,600	73.0	22,500	22,500	75.0	19,500	19,500
35	67.0	22,000	22,000	70.0	19,900	19,900	72.5	18,300	18,300
40	63.5	19,700	19,700	67.0	17,600	17,600	70.0	16,400	16,400
45	59.5	17,500	17,600	63.5	15,900	15,900	67.0	14,600	14,600
50	55.5	14,400	15,400	60.5	14,400	14,400	64.0	13,200	13,200
55	51.0	12,200	12,900	56.5	12,200	13,000	61.0	12,100	12,100
60	46.5	10,300	11,000	53.0	10,300	11,100	57.5	10,400	11,000
65	41.5	8,700	9,400	49.0	8,800	9,500	54.0	8,900	9,600
70	36.0	7,500	8,100	44.5	7,500	8,200	50.5	7,600	8,200
75	29.5	6,400	6,900	40.0	6,500	7,100	47.0	6,500	7,100
80	21.0	5,400	6,000	34.5	5,500	6,100	42.5	5,800	6,200
85				28.5	4,700	5,200	38.5	4,800	5,300
90				20.5	4,000	4,500	33.5	4,100	4,600
95							27.5	3,500	3,900
100							20.0	2,900	3,400
MinBm Ang Cap	0 (84.5)	2,400	2,400	0 (94.5)	1,600	1,600	0 (104.5)	900	900

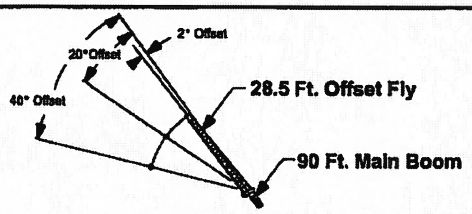

Rated Lifting Capacities In Pounds
Fully Extended Outriggers
See Set Up Note 2

FULL

Load Radius (Ft.)	2° Offset		20° Offset		40° Offset	
	∡°	360°	∡°	360°	∡°	360°
30	77.0	16,700				
35	74.5	14,200				
40	72.0	13,400	75.5	10,500		
45	69.5	12,700	73.0	10,100	78.5	7,900
50	67.0	12,100	70.5	9,600	73.5	7,600
55	64.5	11,500	68.0	9,100	71.0	7,400
60	61.5	10,800	65.0	8,700	68.0	7,200
65	58.5	9,700	62.0	8,300	65.0	7,000
70	55.0	8,400	59.0	8,000	62.0	6,800
75	52.0	7,300	56.0	7,700	58.5	6,700
80	48.5	6,400	52.5	6,800	55.0	6,600
85	44.5	5,500	48.5	5,900	51.0	6,100
90	40.5	4,800	44.0	5,100	46.5	5,300
95	36.0	4,200	39.5	4,400	41.0	4,500
100	31.0	3,600	34.5	3,800		
105	25.0	3,200	28.0	3,300		
110	16.5	2,700				
Min.Bm. Ang./Cap.	0	700	0	800	0	900

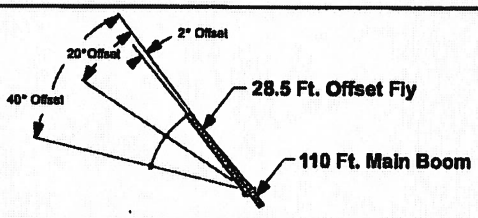

Rated Lifting Capacities In Pounds
Fully Extended Outriggers
See Set Up Note 2

FULL

Load Radius (Ft.)	2° Offset		20° Offset		40° Offset	
	∡°	360°	∡°	360°	∡°	360°
35	77.0	9,400				
40	75.5	9,400				
45	73.5	9,400	77.0	9,500		
50	71.5	9,400	75.0	9,100	78.0°	7,500
55	69.5	9,200	73.0	8,400	76.0	7,300
60	67.5	8,600	70.5	7,800	73.5	7,100
65	65.0	7,900	68.5	7,300	71.0	6,900
70	62.5	7,300	66.0	6,800	68.5	6,500
75	60.0	6,800	63.5	6,400	66.0	6,100
80	57.5	6,200	61.0	6,000	63.5	5,800
85	54.5	5,300	58.0	5,700	60.5	5,500
90	51.5	4,600	55.0	5,000	57.5	5,200
95	48.5	4,000	52.0	4,300	54.5	4,600
100	45.5	3,500	48.5	3,700	50.5	3,900
105	42.0	3,000	45.0	3,200	47.0	3,300
110	38.0	2,500	41.0	2,700	42.5	2,800
115	34.0	2,100	37.0	2,300		

⚠ WARNING

Do Not Lower 28.5 Ft. Offset Fly In Working Position Below 31.5° Main Boom Angle Unless Main Boom Length Is 98 Ft. Or Less, Since Loss Of Stability Will Occur Causing A Tipping Condition.

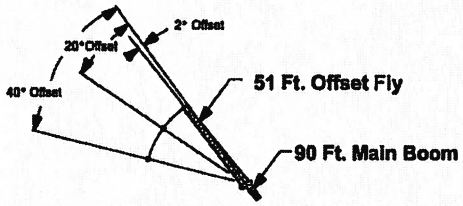

Rated Lifting Capacities In Pounds
Fully Extended Outriggers
See Set Up Note 2

FULL

Load Radius (Ft.)	2° Offset		20° Offset		40° Offset	
	∡°	360°	∡°	360°	∡°	360°
35	78.0°	9,100				
40	76.0	8,600				
45	74.0	8,100				
50	72.0	7,500	78.0°	6,400		
55	70.0	7,000	75.5	5,100		
60	67.5	6,500	73.5	4,800		
65	65.5	6,100	71.5	4,600	77.0	3,600
70	63.0	5,700	69.0	4,400	74.5	3,500
75	61.0	5,400	66.5	4,200	72.0	3,400
80	58.5	5,000	64.0	4,000	69.5	3,300
85	56.0	4,800	61.5	3,800	66.5	3,300
90	53.0	4,500	59.0	3,700	64.0	3,200
95	50.5	4,300	56.0	3,600	61.0	3,100
100	47.5	4,100	53.0	3,600	57.5	3,100
105	44.5	3,700	50.0	3,300	54.0	3,100
110	41.0	3,300	46.5	3,300	50.0	3,000
115	37.0	2,900	43.0	3,200	46.0	3,000
120	33.0	2,500	38.5	2,800	40.5	2,900
125	28.0	2,200	33.0	2,400		
130	22.0	1,900	26.0	2,000		

⚠ WARNING

Do Not Lower 51 Ft. Offset Fly In Working Position Below 15.5° Main Boom Angle Unless Main Boom Length Is 89 Ft. Or Less, Since Loss Of Stability Will Occur Causing A Tipping Condition.

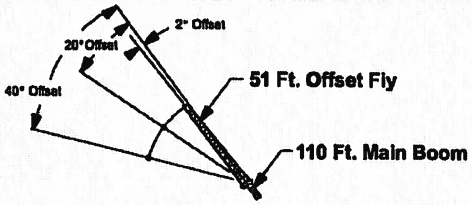

Rated Lifting Capacities In Pounds
Fully Extended Outriggers
See Set Up Note 2

FULL

Load Radius (Ft.)	2° Offset		20° Offset		40° Offset	
	∡°	360°	∡°	360°	∡°	360°
45	77.0	6,200				
50	75.5	6,200				
55	74.0	6,200				
60	72.5	6,200	77.5	4,800		
65	70.5	6,000	75.5	4,600		
70	68.5	5,700	73.5	4,400		
75	66.5	5,300	72.0	4,300	76.5	3,400
80	64.5	4,900	70.0	4,100	74.5	3,400
85	62.5	4,600	68.0	4,000	72.5	3,300
90	60.5	4,300	66.0	3,800	70.0	3,200
95	58.5	4,000	63.5	3,700	68.0	3,200
100	56.0	3,800	61.5	3,500	65.5	3,100
105	53.5	3,500	59.0	3,300	63.0	3,100
110	51.0	3,000	56.5	3,200	60.5	3,000
115	48.5	2,600	54.0	3,000	57.5	2,900
120	45.5	2,200	51.0	2,600	54.5	2,800
125			47.5	2,200	51.0	2,400
130			44.5	1,900	47.0	2,000

⚠ WARNING

Do Not Lower 51 Ft. Offset Fly In Working Position Below 42.5° Main Boom Angle Unless Main Boom Length Is 89 Ft. Or Less, Since Loss Of Stability Will Occur Causing A Tipping Condition.

WORKING RANGE DIAGRAM

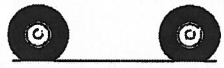

ON TIRES

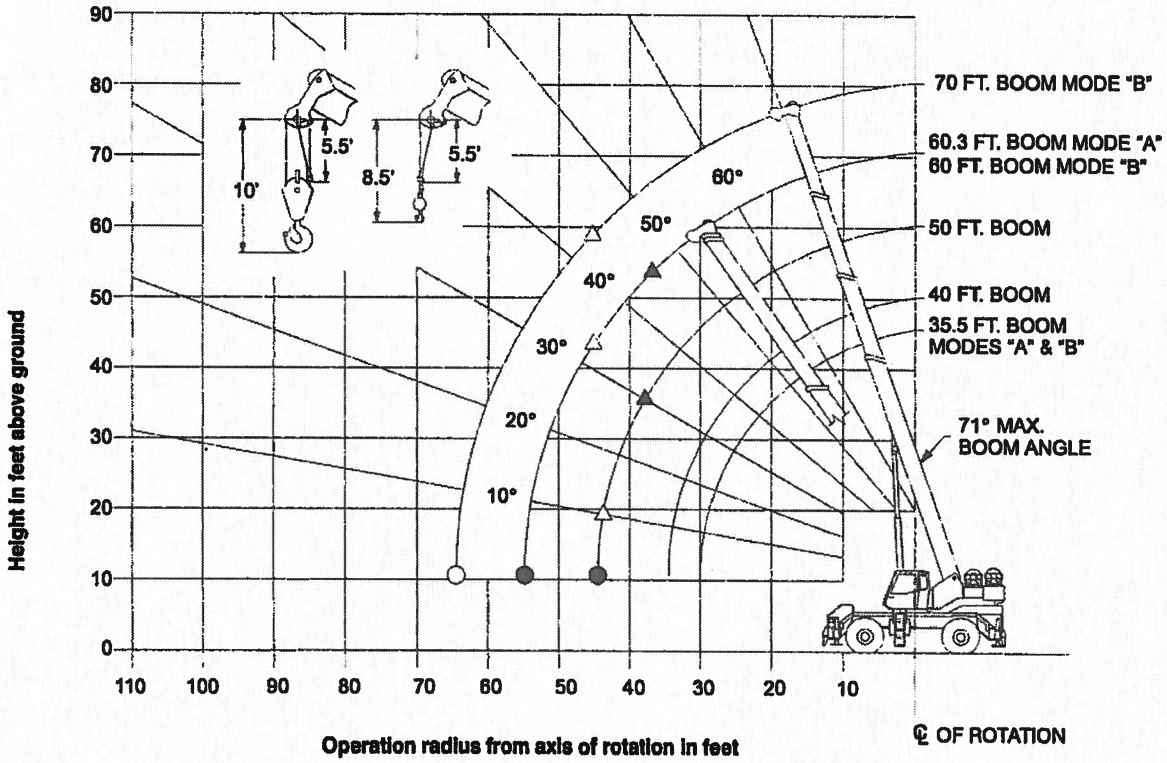

Crane Configurations Prohibited:
Boom Lengths Greater than 71 FT.
28.5 FT. Offset Fly
51 FT. Offset Fly

- ▲ **Denotes Main Boom 360° – Boom Mode "A"**
- △ **Denotes Main Boom 360° – Boom Mode "B"**
- ● **Denotes Main Boom Between Tire Tracks Or Centered Over Front – Boom Mode "A"**
- ○ **Denotes Main Boom Between Tire Tracks Or Centered Over Front – Boom Mode "B"**

Note: Boom geometry shown is for unloaded condition and crane standing level on firm supporting surface. Boom deflection, subsequent radius and boom angle change must be accounted for when applying load to hook.

⚠ WARNING

Do Not Lower The Boom Below The Minimum Boom Angle For No Load Stability Or Raise Boom Above 71° As Shown In The Lift Charts For The Boom Lengths Given. Loss Of Stability Will Occur Causing A Tipping Condition.

Note: Refer To Page 5 For "Capacity Deductions For Auxiliary Load Handling. Equipment". ∡° Loaded Boom Angle In Degrees. ( ) Reference Radius For Minimum Boom Angle Capacities (Shown In Parenthesis) Are In Feet.

On Tire Capacities In Pounds
Tire Pressure: See Page 5
Stationary Capacities
Over Front Between Tire Tracks
See Operation Note 20

ON TIRES

MAIN BOOM "A"

Load Radius (FL)	35 FL ∡°	35 FL Load	40 FL ∡°	40 FL Load
10	68.0	47,300	70.5	47,100
12	64.0	41,600	67.5	41,400
15	56.5	35,100	62.5	35,000
20	48.0	27,400	54.0	27,300
25	34.5	21,900	43.5	21,700
30			31.0	15,500
Min.Bm. Ang./Cap.	0 (30.0)	15,500	0 (34.5)	11,700

Load Radius (FL)	50 FL ∡°	50 FL Load	60.3 FL ∡°	60.3 FL Load
15	68.5	34,600		
20	62.5	27,000	68.0	26,800
25	55.5	21,400	62.5	21,200
30	47.5	15,300	56.5	15,100
35	39.0	11,300	50.5	11,100
40	27.5	8,400	43.5	8,300
45			36.0	6,200
50			25.5	4,600
Min.Bm. Ang./Cap.	0 (44.5)	6,400	0 (54.8)	3,300

On Tire Capacities In Pounds
Tire Pressure: See Page 5
Pick & Carry Capacities
Boom Centered Over Front.
See Operation Note 20

ON TIRES

MAIN BOOM "A"

Load Radius (FL)	35.5 FL ∡°	35.5 FL Creep	35.5 FL 2.5 mph	40 FL ∡°	40 FL Creep	40 FL 2.5 mph
10	68.0	44,100	38,800	70.5	43,900	38,600
12	64.0	38,400	33,600	67.5	38,200	33,500
15	58.5	31,800	27,600	62.5	31,600	27,500
20	48.0	24,000	20,700	54.0	23,900	20,500
25	34.5	18,600	15,800	43.5	18,500	15,700
30				31.0	14,600	12,200
Min.Bm. Ang./Cap.	0 30.0	14,600	12,200	0 34.5	11,700	9,700

Load Radius (FL)	50 FL ∡°	50 FL Creep	50 FL mph	60.3 FL ∡°	60.3 FL Creep	60.3 FL 2.5 mph
15	68.5	31,300	27,200			
20	62.0	23,800	20,300	68.0	23,400	20,100
25	55.5	18,300	15,500	62.5	18,100	15,300
30	47.5	14,400	12,100	56.5	14,300	11,900
35	39.0	11,300	9,400	50.5	11,100	9,300
40	27.5	8,400	7,300	43.5	8,300	7,200
45				36.0	6,200	5,500
50				25.5	4,600	4,100
Min.Bm. Ang./Cap.	0 44.5	6,400	5,700	0 54.8	3,300	2,900

On Tire Capacities In Pounds
Tire Pressure: See Page 5
Stationary Capacities
Over Front Between Tire Tracks
See Operation Note 20

ON TIRES

MAIN BOOM "B"

Load Radius (FL)	35.5 FL ∡°	35.5 FL Load	40 FL ∡°	40 FL Load	50 FL ∡°	50 FL Load
10	68.0	47,300	70.5	37,900		
12	64.0	41,600	67.5	37,900		
15	58.5	35,100	62.5	36,400	68.5	35,800
20	48.0	27,400	54.0	27,800	62.0	28,200
25	34.5	21,900	43.5	22,300	55.5	22,900
30			31.0	16,100	47.5	16,700
35					38.5	12,600
40					27.5	9,700
Min.Bm. Ang./Cap.	0 (30.0)	15,500	0 (34.5)	12,200	0 (44.5)	7,700

Load Radius (FL)	60 FL ∡°	60 FL Load	70 FL ∡°	70 FL Load
20	67.5	28,500		
25	62.0	23,200	67.0	23,400
30	56.5	17,100	62.0	17,200
35	50.0	12,900	57.0	13,100
40	43.0	10,100	52.0	10,300
45	35.0	7,900	46.0	6,200
50	25.0	6,300	40.0	6,500
55			32.5	5,200
60			23.0	4,200
Min.Bm. Ang./Cap.	0 (54.5)	5,000	0 (64.5)	3,300

On Tire Capacities In Pounds
Tire Pressure: See Page 5
Pick & Carry Capacities
Boom Centered Over Front.
See Operation Note 20

ON TIRES

MAIN BOOM "B"

Load Radius (FL)	35.5 FL ∡°	35.5 FL Creep	35.5 FL 2.5 mph	40 FL ∡°	40 FL Creep	40 FL 2.5 mph	50 FL ∡°	50 FL Creep	50 FL 2.5 mph
10	68.0	44,100	38,800	70.5	37,900	37,900			
12	64.0	38,400	33,600	67.5	37,900	33,900			
15	58.5	31,800	27,600	62.5	32,000	27,900	68.5	32,400	28,300
20	48.0	24,000	20,700	53.5	24,300	21,000	62.0	24,700	21,400
25	34.5	18,600	15,800	43.5	19,000	16,200	55.0	19,500	16,700
30				31.0	15,100	12,700	47.5	15,600	13,200
35							38.5	12,600	10,600
40							27.5	9,700	8,500
Min.Bm Ang/ Cap	0 (30.0)	14,600	12,200	0 (34.5)	12,200	10,200	0 (44.5)	7,700	6,900

Load Radius (FL)	60 FL ∡°	60 FL Creep	60 FL 2.5 mph	70 FL ∡°	70 FL Creep	70 FL 2.5 mph
20	67.5	25,000	21,700			
25	62.0	19,800	16,900	66.5	19,900	17,100
30	56.5	15,900	13,500	62.0	16,100	13,700
35	50.0	12,900	10,900	57.0	13,100	11,200
40	43.0	10,100	8,900	52.0	10,300	9,100
45	35.0	7,900	7,200	46.0	6,200	7,400
50	25.0	6,300	5,800	40.0	6,500	6,100
55				32.5	5,200	4,900
60				23.0	4,200	3,900
Min.Bm. Ang./Cap.	0 (54.5)	5,000	4,700	0 (64.5)	3,300	3,200

On Tire Capacities In Pounds
Tire Pressure: See Page 5
Stationary Capacities – 360 Degree
See Operation Note 20

360°

ON TIRES

MAIN BOOM "A"

Load Radius (Ft.)	35.5 Ft.		40 Ft.	
	∡°	Load	∡°	Load
10	68.0	37,200	70.5	36,900
12	64.0	31,100	67.5	30,900
15	58.5	24,000	62.5	23,800
20	48.0	14,500	53.5	14,300
25	34.5	9,400	43.5	9,300
30			31.0	6,100
Min.Bm. Ang./Cap.	0 (30.0)	6,100	0 (34.5)	4,000

Load Radius (Ft.)	50 Ft.		60.3 Ft.	
	∡°	Load	∡°	Load
15	68.5	23,400		
20	62.0	14,000	67.5	13,800
25	55.0	9,100	62.0	8,900
30	47.5	5,900	56.5	5,800
35	38.5	3,800	50.5	3,800
Min.Bm. Ang./Cap.	30.0 (38.9)		45.5 (38.3)	

WARNING

Do Not Raise Boom Above 71° Boom Angle. Loss Of Backward Stability Will Occur Causing a Tipping Condition.

On Tire Capacities In Pounds
Tire Pressure: See Page 5
Stationary Capacities–360 Degree
See Operation Note 20

360°

ON TIRES

MAIN BOOM "B"

Load Radius (Ft.)	35.5 Ft.		40 Ft.		50 Ft.	
	∡°	Load	∡°	Load	∡°	Load
10	68.0	37,200	70.5	37,400	74.5	37,700
12	64.0	31,100	67.5	31,400	72.5	31,800
15	58.5	24,000	62.5	24,400	68.5	24,900
20	48.0	14,500	53.5	14,800	62.0	15,400
25	34.5	9,400	43.5	9,800	55.0	10,300
30			31.0	6,600	47.5	7,100
35					38.5	5,000
40					27.5	3,400
Min.Bm. Ang./Cap.	0 (30.0)	6,100	0 (34.5)	4,500	10.0 (44.1)	

Load Radius (Ft.)	60 Ft.		70 Ft.	
	∡°	Load	∡°	Load
20	67.0	15,700	71.0	
25	62.0	10,700	66.5	10,900
30	56.0	7,500	61.5	7,700
35	50.0	5,300	57.0	5,500
40	43.0	3,700	51.5	3,900
45	35.0	2,500	46.0	2,700
Min.Bm. Ang./Cap.	33.0 (46.0)		43.5 (47.2)	

WARNING

Do Not Raise Boom Above 71° Boom Angle. Loss Of Backward Stability Will Occur Causing a Tipping Condition.